2 POLI + T	DIRITTA	16A-250V
2 PIN + EARTH	STRAIGHT	16A-250V
2 POLE+ T	DROITE	16A-250V
2 POLIG+T	ZENTRAL	16A-250V

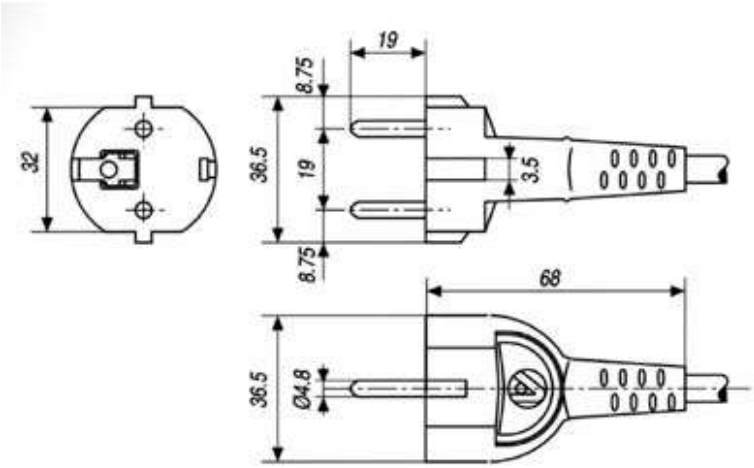

H03VV -F 3G0.75 mm2	■			■														
H05VV-F 3G0.75 mm2	■			■														
H05VV-F 3G1 mm2	■			■														
H05VV-F 3G1.5 mm2	■			■														
H05RR-F 3G0.75 mm2	■			■														
H05RR-F 3G1 mm2	■			■														
H05RR-F 3G1.5 mm2	■			■														
H05RN-F 3G0.75 mm2	■			■														
H05RN-F 3G1 mm2	■			■														
H07RN-F 3G1 mm2	■			■														
H05V2V2-F 3G0.75 mm2	■			■														
H05V2V2-F 3G1 mm2	■			■														
H05V2V2-F 3G1.5 mm2	■			■														

■ Approvazioni possedute
Approvals got
Aprobations obtenues
Erlangte Zulassungen

■ Approvazioni in corso di ottenimento
Approvals in course of proceeding
Approbations en cours d'obtention
Zulassungen mit laufendem Verfahren